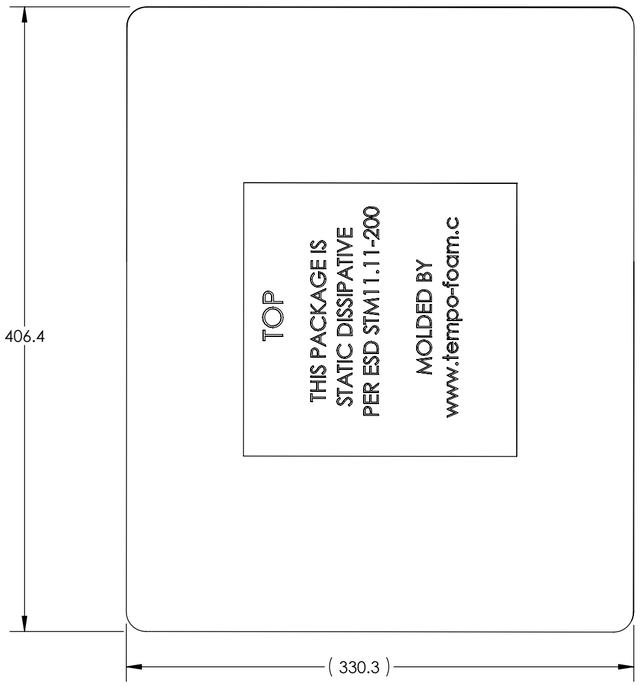

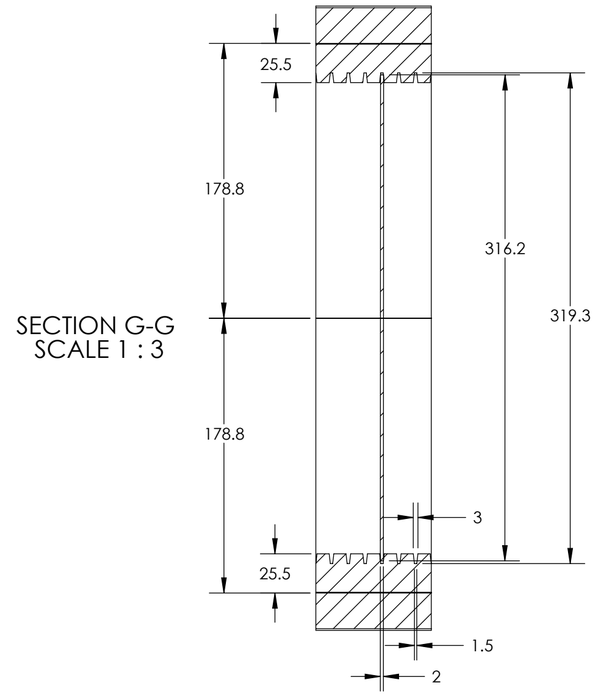

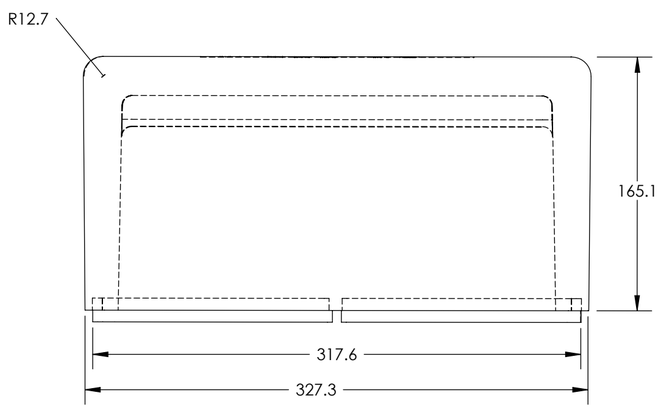

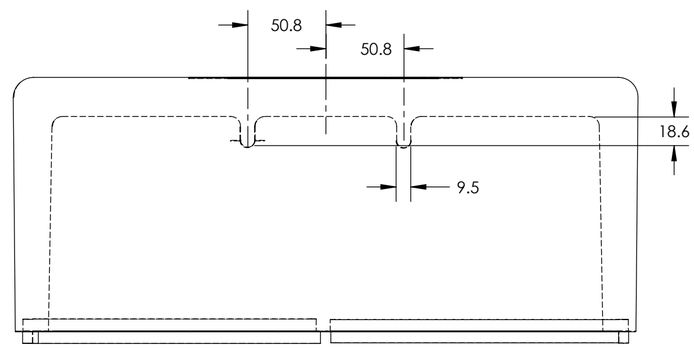

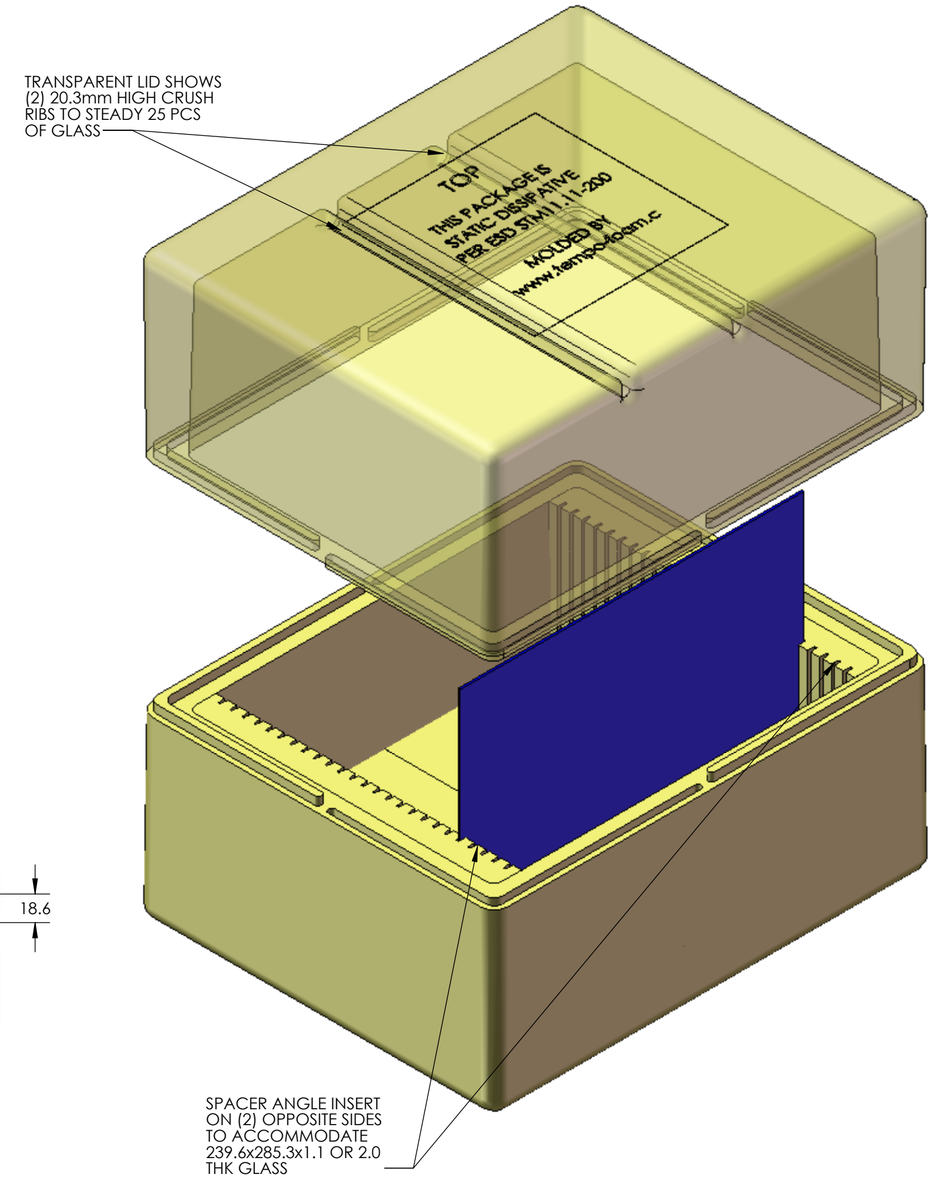

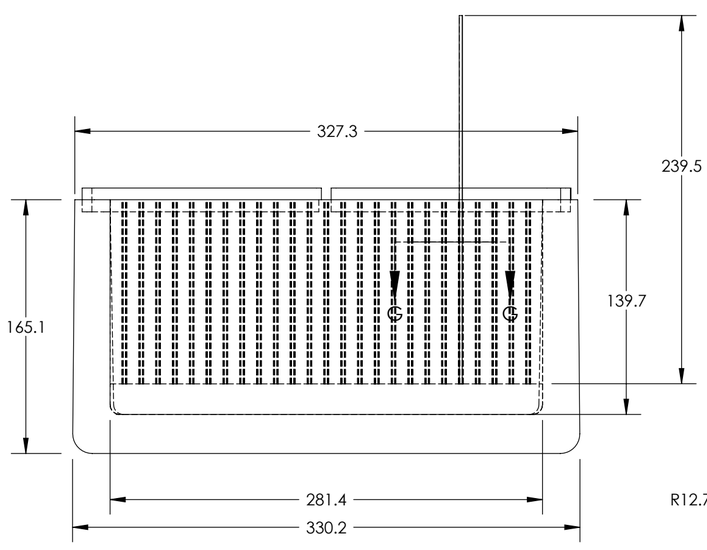

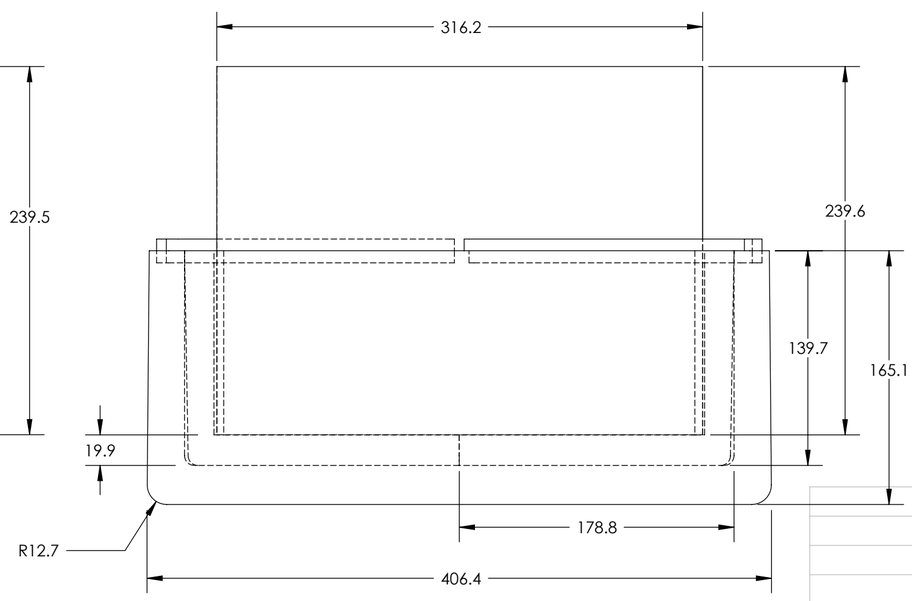

NOTES:

1- MATERIAL: DRY MOLDED POLYSTYRENE, 63 gm/liter
2- ALL DIMENSIONS ARE IN MILLIMETERS
3- WEIGHT: gm
4- VOLUME: CU CENTIMETERS

PROPRIETARY AND CONFIDENTIAL

THE INFORMATION CONTAINED IN THIS DRAWING IS THE SOLE PROPERTY OF TEMPO PLASTIC CO., INC. ANY REPRODUCTION IN PART OR AS A WHOLE WITHOUT THE WRITTEN PERMISSION OF TEMPO PLASTIC CO., INC. IS PROHIBITED.

NEXT ASSY	USED ON
APPLICATION	

UNLESS OTHERWISE SPECIFIED:
DIMENSIONS ARE IN INCHES
TOLERANCES:
FRACTIONAL ±
ANGULAR: MACH ± BEND ±
TWO PLACE DECIMAL ±
THREE PLACE DECIMAL ±
INTERPRET GEOMETRIC TOLERANCING PER:
MATERIAL
FINISH
DO NOT SCALE DRAWING

	NAME	DATE
DRAWN	J ELLIS	23Apr07
CHECKED	DBR	23Apr07
ENG APPR.		
MFG APPR.	DBR	23Apr07
Q.A.		

COMMENTS:

TEMPO PLASTIC CO, INC.
1227 N. MILLER PARK COURT
VISALIA, CA 93291

TITLE: BASE LID INSERT PKG #TPC-315 ASSY FOR 239.6x316.2x1.1 OR 2.0 THK GLASS

SIZE	DWG. NO.	REV
C	042307JRE1	
SCALE: 1:5	WEIGHT:	SHEET 1 OF 1