www.tempo-foam.com

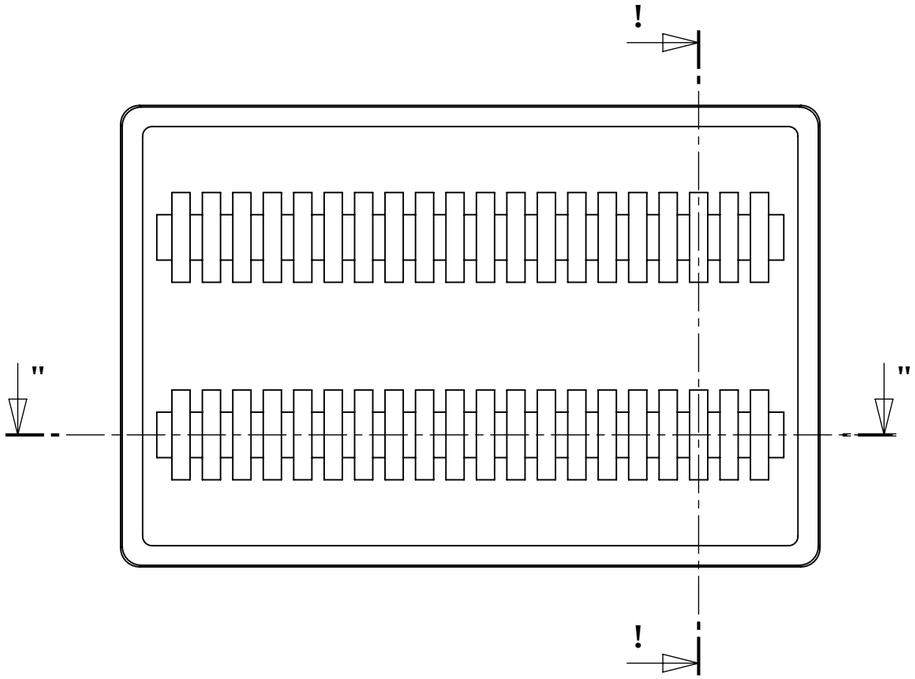

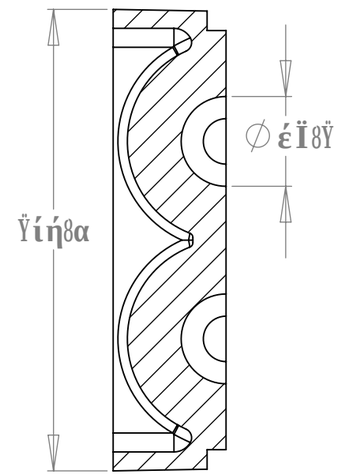

3%#4) / . !Ζ!

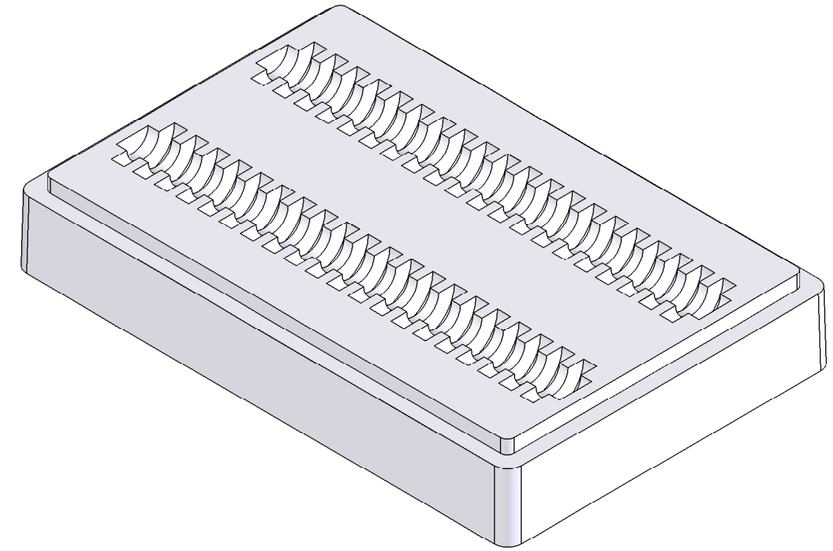

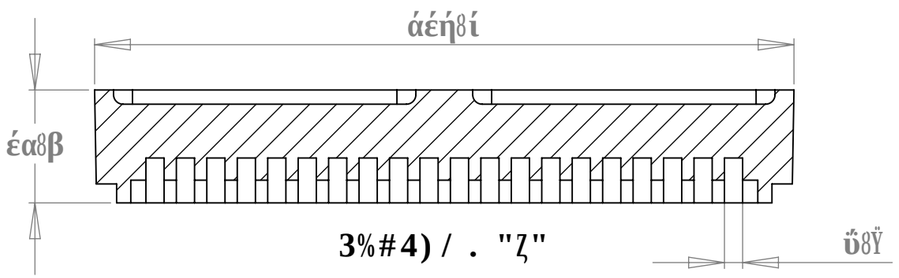

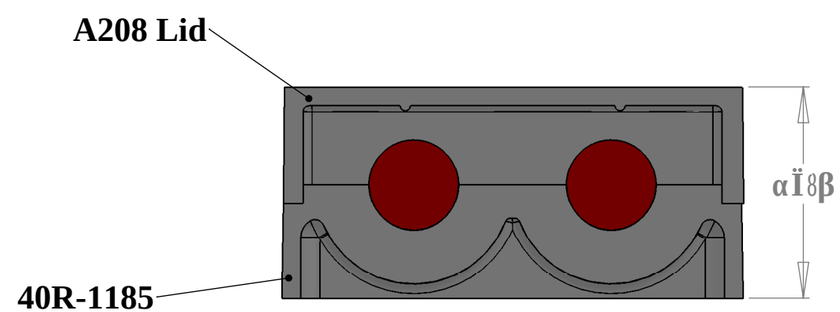

Cut section with part in place

Note:
1) Material To be 64g/l density (4.0 lb/ft3)
   Static Dissipative EPS
2) 1 Degree Draft TYP
3)

PROPRIETARY AND CONFIDENTIAL

THE INFORMATION CONTAINED IN THIS DRAWING IS THE SOLE PROPERTY OF **TEMPO PLASTIC CO, INC.** ANY REPRODUCTION IN PART OR AS A WHOLE WITHOUT THE WRITTEN PERMISSION OF **TEMPO PLASTIC CO, INC.** IS PROHIBITED.

NEXT ASSY	USED ON
APPLICATION	

UNLESS OTHERWISE SPECIFIED:
DIMENSIONS ARE IN MM
TOLERANCES:
FRACTIONAL ±
ANGULAR: MACH ± BEND ±
TWO PLACE DECIMAL ±
THREE PLACE DECIMAL ±
INTERPRET GEOMETRIC TOLERANCING PER:
MATERIAL
FINISH
DO NOT SCALE DRAWING

	NAME	DATE
DRAWN	JUNIOR	6/29/10
CHECKED		
ENG APPR.		
MFG APPR.		
Q.A.		

COMMENTS:

TEMPO PLASTIC CO, INC.

TITLE:
40R-1185

SIZE **B** | DWG. NO. | REV **A**

SCALE: 1:2 | SHEET 1 OF 1