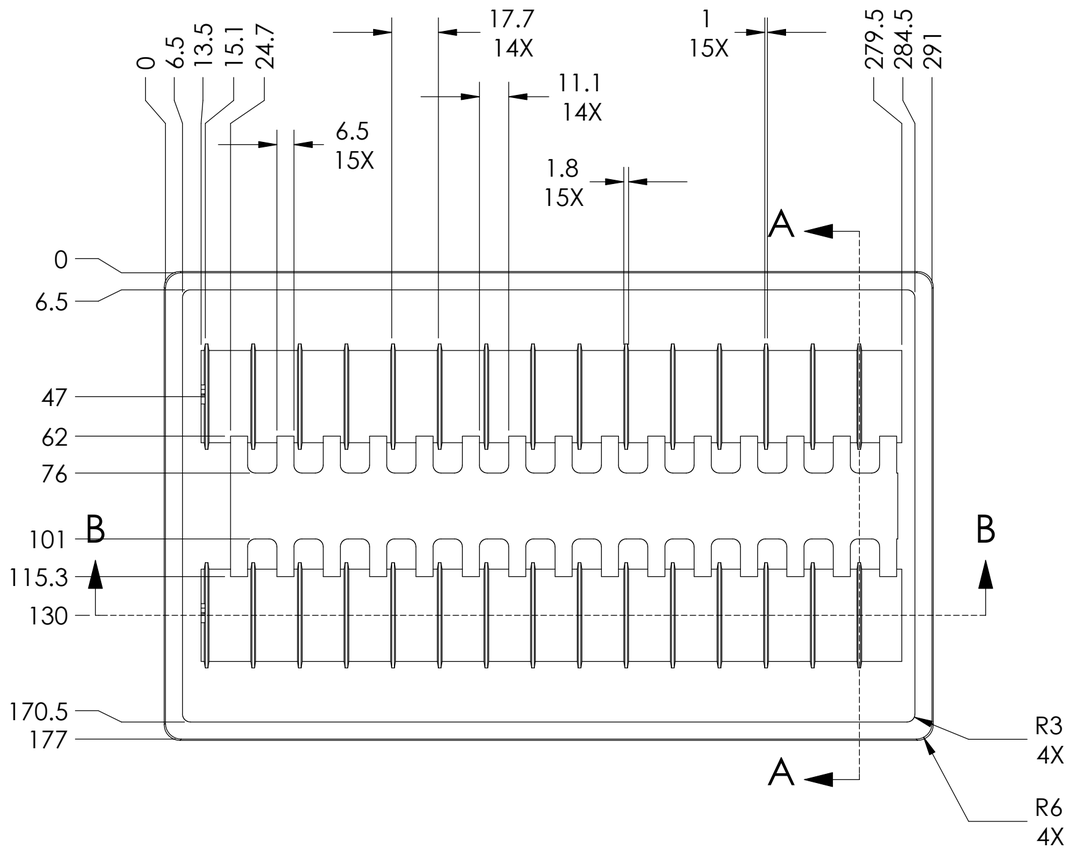

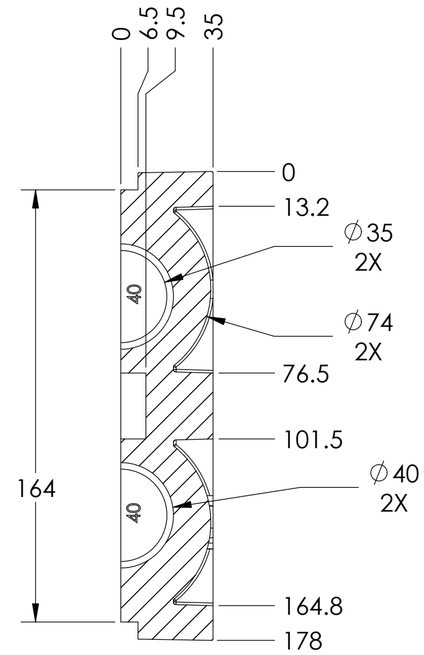

SECTION A-A
SCALE 1 : 1.75

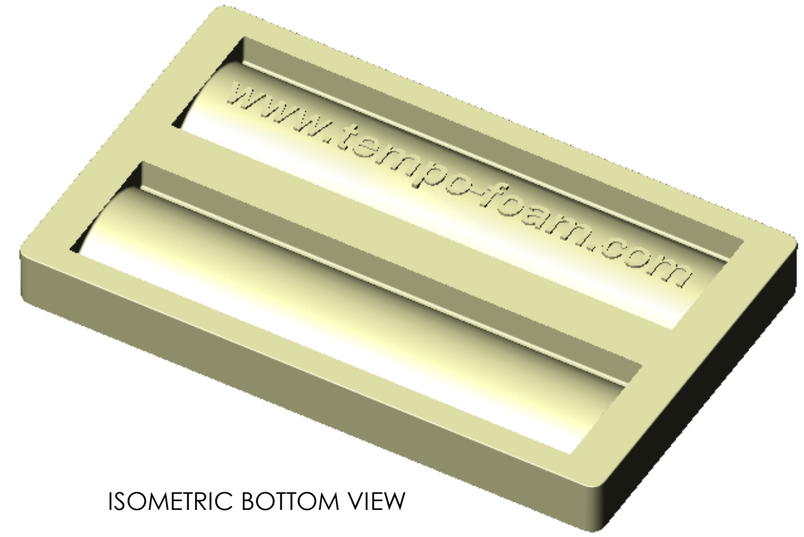

ISOMETRIC BOTTOM VIEW

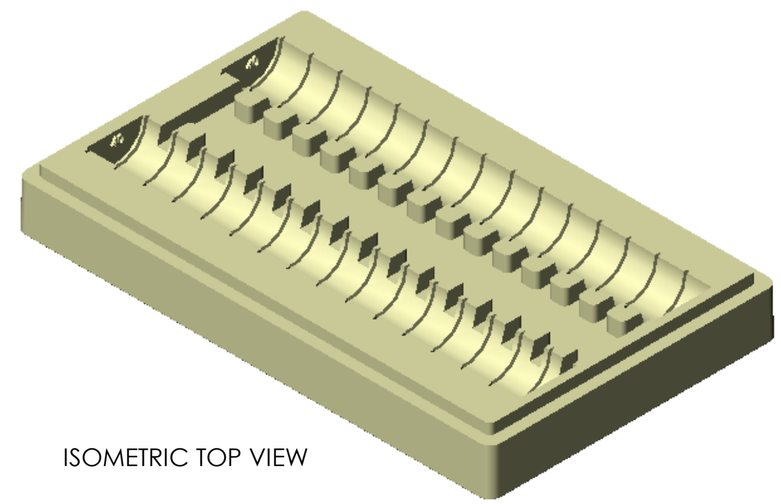

ISOMETRIC TOP VIEW

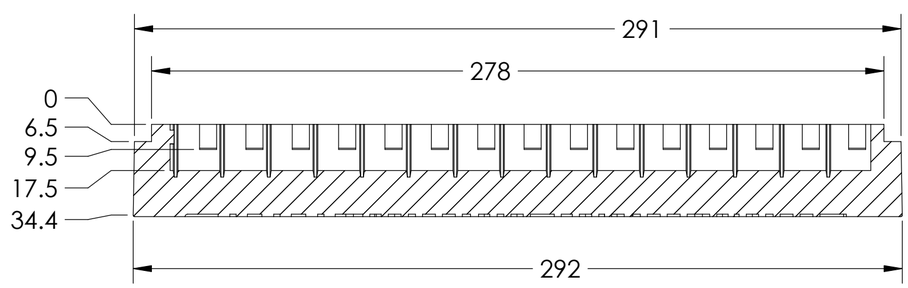

SECTION B-B
SCALE 1 : 1.75

NOTES:

1- MATERIAL: DRY MOLDED POLYSTYRENE, 63 gm/liter
2- ALL DIMENSIONS ARE IN MILLIMETERS
3- WEIGHT: 79.4 gm
4- VOLUME: 1240.6 CU CENTIMETERS

PROPRIETARY AND CONFIDENTIAL

THE INFORMATION CONTAINED IN THIS DRAWING IS THE SOLE PROPERTY OF TEMPO PLASTIC CO., INC. ANY REPRODUCTION IN PART OR AS A WHOLE WITHOUT THE WRITTEN PERMISSION OF TEMPO PLASTIC CO., INC. IS PROHIBITED.

NEXT ASSY	USED ON
APPLICATION	

UNLESS OTHERWISE SPECIFIED:
DIMENSIONS ARE IN INCHES
TOLERANCES:
FRACTIONAL ±
ANGULAR: MACH ± BEND ±
TWO PLACE DECIMAL ±
THREE PLACE DECIMAL ±
INTERPRET GEOMETRIC TOLERANCING PER:
MATERIAL
FINISH
DO NOT SCALE DRAWING

	NAME	DATE
DRAWN	J ELLIS	31Dec04
CHECKED	DBR	31Dec04
ENG APPR.		
MFG APPR.	DBR	31Dec04
Q.A.		

COMMENTS:

TEMPO PLASTIC CO, INC.
1227 N. MILLER PARK COURT
VISALIA, CA 93291

TITLE:
40 mm CW PKG BASE

SIZE	DWG. NO.	REV
C	123104JRE	
SCALE: 1:2	WEIGHT:	SHEET 1 OF 1